# Electronics Documentation

## 1. Electronics Block Diagram

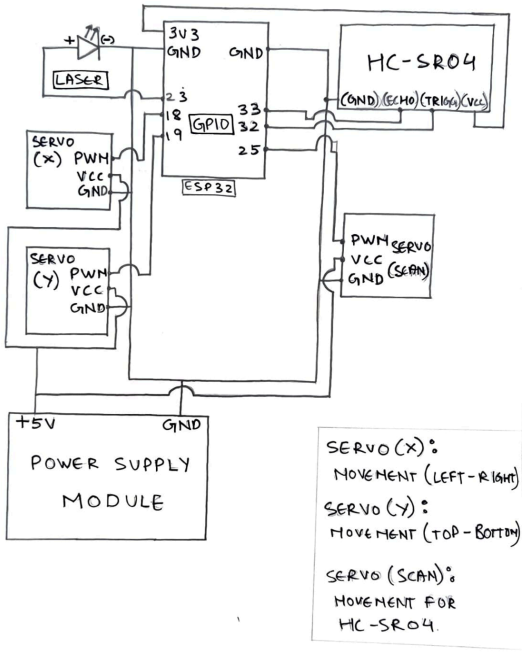


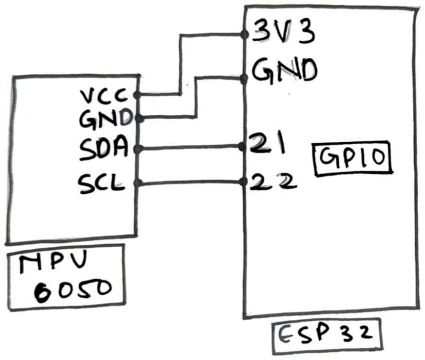


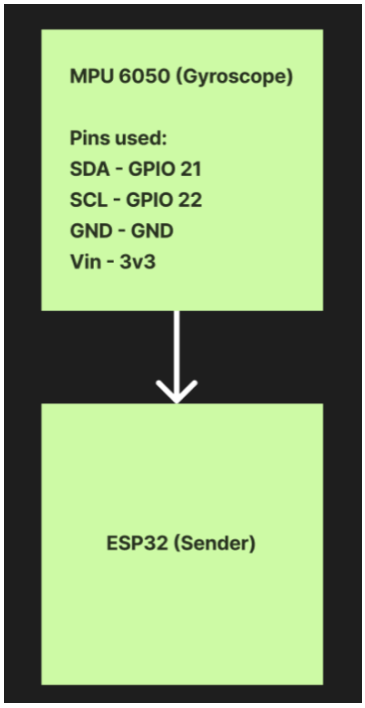


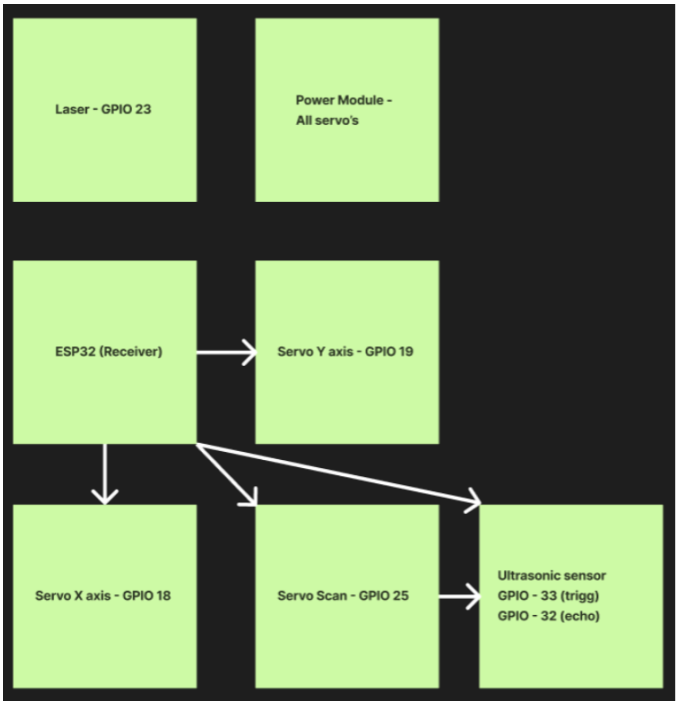

## 2. Components Table

| Component | Quantity | Purpose | Justification |
|---|---|---|---|
| **ESP32** | **2** | One acts as the transmitter (remote), the other as the receiver (turret) | **Chosen for built-in wireless, fast processing, and ability to handle multiple peripherals like servos and sensors simultaneously** |
| **MPU6050** | **1** | Detects hand tilt and motion for gesture control | **Enables intuitive, real-time control without physical buttons, compact and cost-effective** |
| **Servo Motor** | **3** | Two for turret movement (X & Y axis), one for ultrasonic scanning | **Provides precise angular control required for aiming and scanning functions** |
| **Ultrasonic sensor** | **1** | Measures distance to detect nearby objects | **Allows the system to interact with its environment and adds responsiveness beyond user input** |
| **Laser Module** | **1** | Provides visual feedback when an object is detected | **Simulates targeting/alert system and enhances user interaction with immediate feedback (shooting)** |
| **Power Supply Module** | **1** | Powers servos and turret ESP32 | **Necessary because servos require stable external power as ESP32 alone cannot supply enough current** |
| **Jumper Wires** | **Multiple** | Connects all components | **Essential for prototyping and flexible circuit setup** |
| **Breadboard** | **2 big, 1 small = 3** | Mounting and organizing circuit connections | **Keeps wiring structured and reduces connection errors** |
| **Copper wires** | **Multiple** | To complete connections | **To make seamless connection between esp32 and mpu6050 gyroscope** |